REFUSE, TRANSFER AND CHIP TRAILER BOX DETAIL SHEET

Accurate physical, tape measurements are essential for proper fitting tarp. Complete form along with appropriate section in Systems Guide.

CONTACT INFORMATION

Name _____ Date _____

Address _____

City _____ State _____ Zip _____

Email/Phone _____

BOX MEASUREMENTS Exact Measurements Required

☑ Semi Trailer

Top Outside Box Length (A) _____

Top Outside Box Width (B) Front _____ Rear _____

Box Height From Ground (C) _____

ROLL TARP SYSTEM

☑ EZ-LOC HD

☑ Front Spring Arm

☐ Rear Spring Arm w/ Chain

☐ Control Box and Remote

☐ Rear 51" Side Mounted Spring Box (mount horizontal or vertical)

☐ Switch Control

END CAPS

☐ None

MATERIAL	☐ Galvanized	☐ Aluminum	☐ Stainless Steel
RISE	☐ 7"	☐ 12"	☑ Flat
FRONT	☐ Side Mount	☐ Top Mount	
REAR	☐ Side Mount	☐ Top Mount	
BRACKET	☑ Top Bolt Through		

FILLERS

FRONT	☐ Metal	☐ 18 oz.	☐ 22 oz.
REAR	☐ Metal	☐ 18 oz.	☐ 22 oz.

DEPTH Front (l^1) _____ Rear (l^2) _____

MOUNT (metal only) Front ☐ Side ☐ Top Rear ☐ Side ☐ Top

DROP (fabric only) Front (M) _____ Rear (K) _____

LADDER _____ in. (away from trailer)

NOSE CONE _____ in. (length of nose cone)

☑ Manual Override Kit (PN 70090)

BOWS

☑ Do Not Add Bows

RIDGE SUPPORT

☑ Do Not Add Ridge Support

TARP

☐ 18 oz. ☐ 22 oz. ☐ Mesh

☐ Bow Reinforcements [3] ☐ Drain Holes [3]

Tarp Color(s) _____

ADDITIONAL OPTIONS AND ACCESSORIES	QTY.

BOX MEASUREMENTS

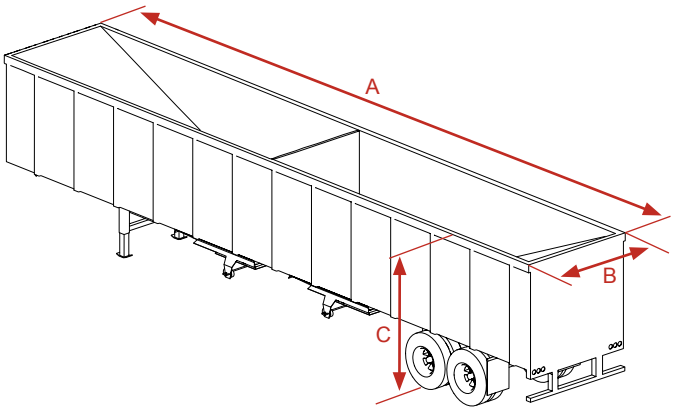

FILLERS

Metal

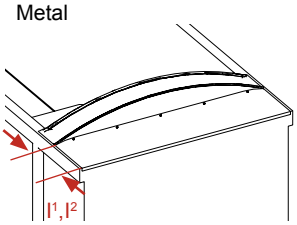

CORNER CONFIGURATION

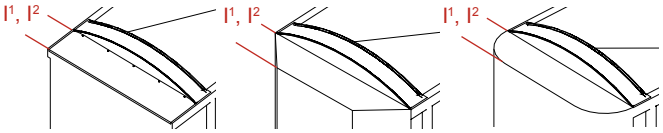

Square Diagonal Radius

For radius and diagonal corners, use a carpenter's square to measure depth required.

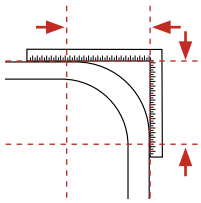

AGRI-COVER, INC.

3000 Hwy 281 SE
Jamestown, ND 58401
T (800) 233-4655
F (800) 592-4460
orderdesk@agricover.com

[3]Include corresponding box detail sheet.

By submitting this order, I accept the terms and conditions of Agri-Cover, Inc. **NO RETURNS**