HARD TRUCK BOX COVER
SPECIAL BOLT ON SIDE RAIL INSTRUCTIONS

2024-ON TOYOTA TACOMA WITH DECK RAIL

Read and follow these special instructions along with the standard instructions carefully before installing or using this cover.

NOTICE TO INSTALLER: Even if familiar with product, read special instructions prior to installation as improvements may be made without notice. Always handle components with care. When done, these special instructions must be given to the consumer.

NOTICE TO CONSUMER: Before using this product, read special instructions. Save these special instructions for future reference.

NOTICE TO CONSUMER AND INSTALLER: Side rails in this kit mount to the deck rail system with special bolt on brackets instead of standard clamps as shown in standard instructions. Cover may disable or limit use of some deck rail systems.

PREPARATION

TOOLS NEEDED

- Ft-lbs Torque wrench
- Ratchet with 7/16” socket
- Protective eyeware

⚠ CAUTION: Over torquing hardware may damage components.

NOTE: For best adhesion, ensure air and surface temperatures are above 60° F.

NOTE: Hardware appearance and components may vary.

1: INSTALLING WEATHER SEAL

A. Clean vertical surface above deck rail system from bulkhead to tailgate with alcohol pad.

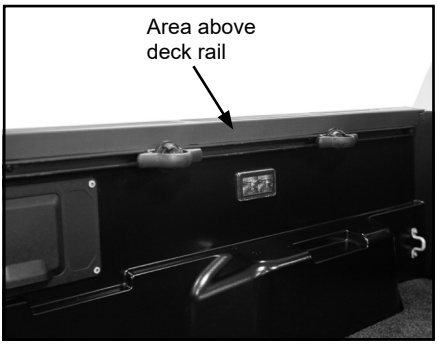

B. Trim 1/8” off of wiper side of seal.

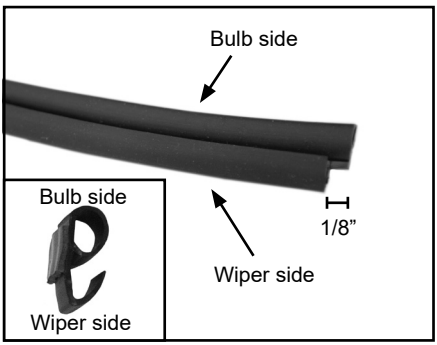

C. Peel small segment of protective backing from trimmed end of weather seal. At front of truck, align top of weather seal with top of box rail. With bulb side up, adhere seal so trimmed portion of wiper side of seal touches bulkhead.

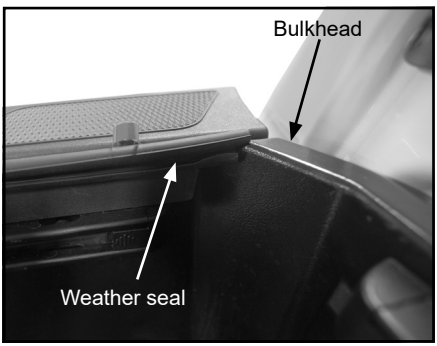

1: INSTALLING WEATHER SEAL (Continued)

NOTE: Ensure top of seal is aligned with top of box rail until bed cap feature is reached.

D. Continue peeling protective backing and adhere weather seal to vertical surface above deck rail system until bed cap feature is reached at rear.

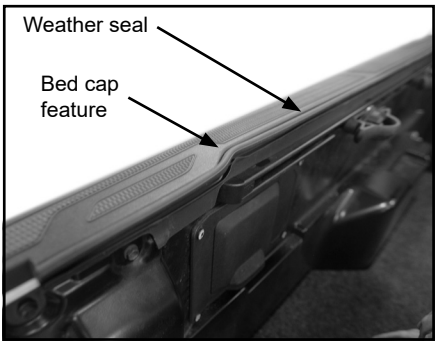

E. At bed cap feature, slightly raise weather seal so the adhesive is at top of box rail.

F. Trim excess weather seal at end of bed cap feature.

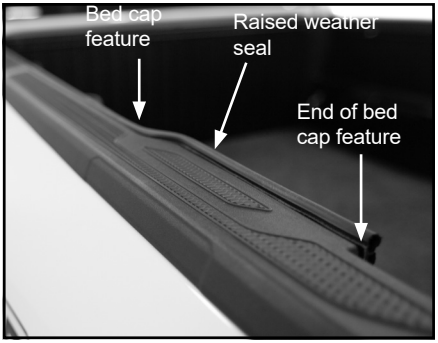

2: INSTALLING BRACKETS TO SIDE RAIL

NOTE: Refer to standard instructions for side rail orientation and to assemble multi-piece side rails.

NOTE: Ensure to use the correct bracket at rail locations.

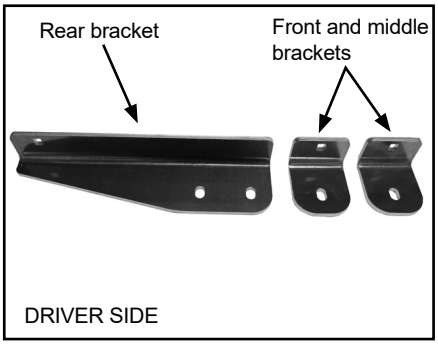

2: INSTALLING BRACKETS TO SIDE RAIL (Continued)

A. Align square holes in brackets with holes in side rail. Secure with 1/4” x 3/4” carriage bolts, flat washers, lock washers and nuts, then finger tighten.

NOTE: Safety strap location varies by product. If two holes are present at front of rail, use front hole for safety strap.

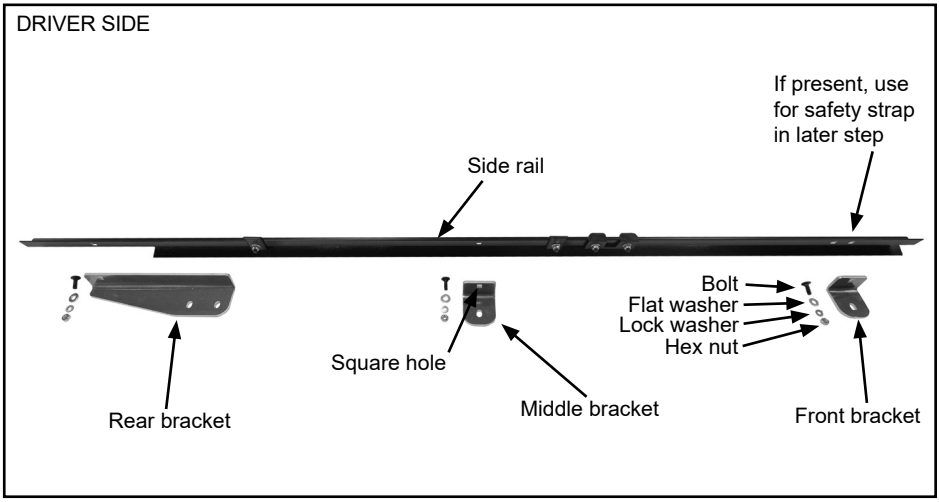

3: INSTALLING SIDE RAILS

A. Remove deck rail system plug at end of channel near tailgate.

B. Remove tie downs from deck rail system by sliding toward opening near tailgate.

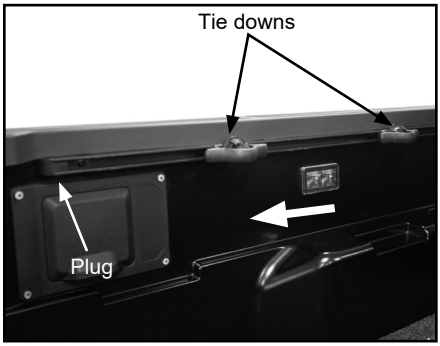

NOTE: Ensure elevator bolt is seated in concave side of channel insert.

C. Slide (4) channel inserts (square hole) with 1/4” x 1-1/4” elevator bolts and tie downs into channel of deck rail system.

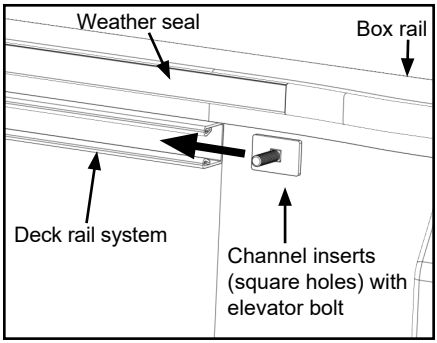

NOTE: Position tie downs as desired between brackets. After installing cover, ensure cover components do not contact tie downs. Adjust tie downs as needed.

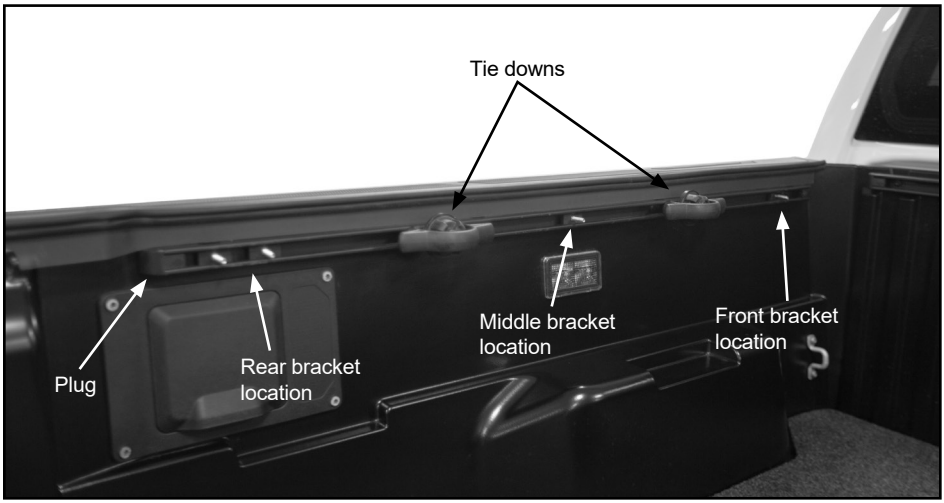

D. Reinsert deck rail system plug at end of channel near tailgate.

3: INSTALLING SIDE RAILS (Continued)

E. Set side rail guide on top of box rail with elevator bolts aligned with brackets on side rails. Push side rail forward until rail touches front of box.

NOTE: Ensure notched portion of side rail is at rear of truck.

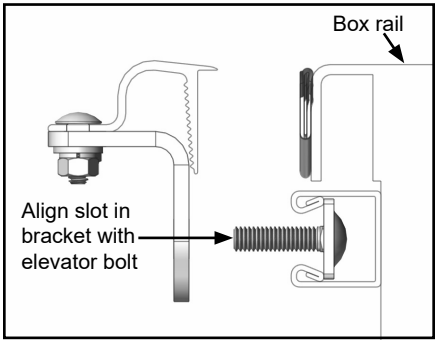

F. Ensure gap between side rail and tailgate is 1/4”.

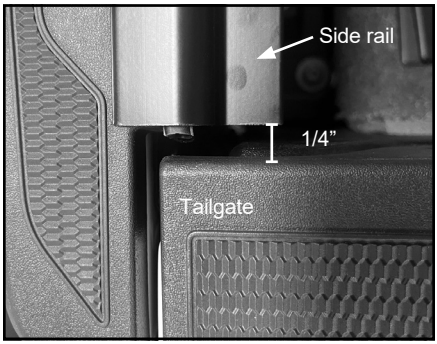

G. Ensure side rail is level, starting at the front secure brackets with serrated flange nuts first, then tighten hex nuts.

NOTE: Compress weather seal at rear by applying pressure to the rail while tightening serrated flange nut.

NOTE: Compress weather seal by applying pressure to rail again while tightening hex nuts.

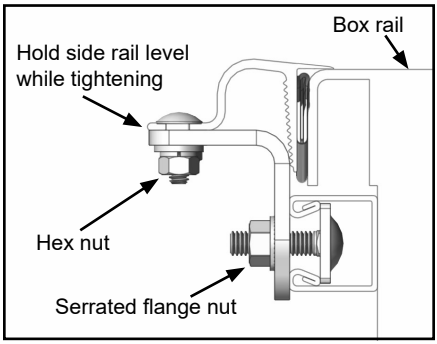

H. Torque all bolts to 10 ft-lbs.

I. Repeat Steps 1-3 to install side rail on opposite side.

J. **For remaining cover installation, refer to standard instructions.**